Quantum

User's Guide User's Guide User's Guide User's Guide User's Guide User's Guide

Travan Portable USB Tape Drive

Travan

50002767

Quantum Travan Portable USB Tape Drive User's Guide, P/N 50002767, May 2005
Made in USA.

Quantum Corporation provides this publication "as is" without warranty of any kind, either express or implied, including but not limited to the implied warranties of merchantability or fitness for a particular purpose. Quantum Corporation may revise this publication from time to time without notice.

COPYRIGHT STATEMENT

Copyright 2005 by Quantum Corporation. All rights reserved.

Your right to copy this manual is limited by copyright law. Making copies or adaptations without prior written authorization of Quantum Corporation is prohibited by law and constitutes a punishable violation of the law.

TRADEMARK STATEMENT

Quantum and the Quantum logo, are all registered trademarks of Quantum Corporation.

Other trademarks may be mentioned herein which belong to other companies.

Contents

Chapter 1 **Introduction and Installation** **1**

Introduction 1
System Requirements 2
Installing the Drive 2

Chapter 2 **Opertation and Maintenance** **7**

Loading and Unloading Cartridges 7
Handling Travan Cartridges 9
Retensioning Tapes 10
Write-Protecting Cartridges 10
Recommended Tape Cartridges 11
Cleaning the Tape Drive Mechanism 12

Chapter 3 **Troubleshooting** **13**

Basic Troubleshooting 13
Advanced Troubleshooting 14
Tape Operations Troubleshooting 16

Figures

Figure 1 Travan Portable USB Tape Drive 3
Figure 2 Connecting a Power Adapter 3
Figure 3 Turning on the Drive 4
Figure 4 Connecting a USB Cable 5
Figure 5 Loading a Cartridge 8
Figure 6 Write-Protecting a Cartridge 11
Figure 7 Locating Your USB Controller (Windows 98) 15
Figure 8 Locating Your USB Controller (Windows 2000 or Windows XP) 15

Tables

Table 1 Loading a Cartridge 8
Table 2 Unloading a cartridge 9
Table 3 Compatible Tape Cartridges 12

Preface

Audience

This manual is written for users of the Travan Portable USB Tape Drive.

Purpose

This document provides information about the Travan Portable USB Tape Drive including:

- Installing the drive
- Basic operations
- Maintenance
- Troubleshooting

Document Organization

This document is organized as follows:

- Chapter 1, Overview, provides an overview of the Travan Portable USB Tape Drive and installation instructions.
- Chapter 2, Basic Operations, describes how to operate and care for your tape drive and cartridges..
- Chapter 6, Running the Demonstration Programs, troubleshooting tips and technical support information.

Notational Conventions

This manual uses the following conventions:

Note: Notes emphasize important information related to the main topic.

Caution: Cautions indicate potential hazards to equipment and are included to prevent damage to equipment.

Warning: Warnings indicate potential hazards to personal safety and are included to prevent injury.

Contacts

Quantum company contacts are listed below.

Quantum Corporate Headquarters

To order documentation on the Travan Portable USB Tape Drive or other products contact:

Quantum Corporation
P.O. Box 57100
Irvine, CA 92619-7100
(949) 856-7800
(800) 284-5101

Technical Publications

To comment on existing documentation send e-mail to:

doc-comments@quantum.com

Quantum Home Page

Visit the Quantum home page at:

http://www.quantum.com

Customer Support

The Quantum Customer Support Department provides a 24-hour help desk that can be reached at:

North/South America:	(949) 725-2100 or (800) 284-5101
Asia/Pacific Rim:	(International Code) + 61 7 3839 0988
Europe/Middle East/Africa:	(International Code) + 44 (0) 1256 848748

Send faxes for the Customer Support Department to:

North/South America:	(949) 725-2176
Asia/Pacific Rim:	(International Code) + 61 7 3839 0955
Europe/Middle East/Africa:	(International Code) + 44 (0) 1256 848777

Send e-mail for the Customer Support Department to:

Asia/Pacific Rim:	apachelp@quantum.com
Europe/Middle East/Africa:	eurohelp@quantum.com

Visit our web site:

www.quantum.com/support

Chapter 1

Introduction and Installation

This chapter provides a description of the Quantum Travan Portable USB Tape Drive and installation procedures.

Introduction

The Quantum Travan Portable USB tape drive is available in 20GB and 40GB models, with capacities of up to 20 and 40 Gbytes, respectively (based on 2:1 data compression). For a list of the tape formats supported by each drive, see table 3 on page 12.

Note:	You cannot use TR-1, TR-2, TR-3 or QIC-80 tapes with either the 20GB or the 40GB drive. In addition, you cannot use TR-4 tapes in the 40GB drive.

System Requirements

Following are the system requirements for the Quantum Travan Portable USB Tape Drive.

- Windows 98, Windows Me, Windows 2000, Windows 2003, or Windows XP operating system
- At least one unused USB port

> **Note:** For the Travan 40 GB, a high speed USB 2.0 port is strongly recommended. USB 1.1 ports are available on most PCs and laptops manufactured after 1998; USB add-on boards are also readily available at computer stores.

- CD-ROM drive (for software installation)

Installing the Drive

Following is the installation procedure for the Quantum Travan Portable USB Tape Drive.

1. Boot up your computer

   Your computer should be powered on and the operating system should be fully loaded before you attach the USB drive.

2. Pre-install the USB driver (Windows 98/Windows Me only)

   - If you are attaching the tape drive to a computer running Windows 98 or Windows Me, you must pre-install the drivers from the Resource CD:
   - From **My Computer** on the Windows desktop, navigate to your CD-ROM drive that contains the Resource CD and go to the Travan USB directory.
   - Run the TPP Storage Driver program by double-clicking **tppinst.exe**. Follow the online wizard instructions to install the complete driver set.

3 Set up the drive

As shown in figure 1, the Travan Portable USB Tape Drive can operate in a horizontal position (with the label facing down) or in a vertical position (supported by the drive stand, with the label facing to the left). When mounting the drive in the drive stand, make sure that the two tabs in the drive stand lock into the two slots in the side of the drive. Do not move the drive while it is running.

Figure 1 Travan Portable USB Tape Drive

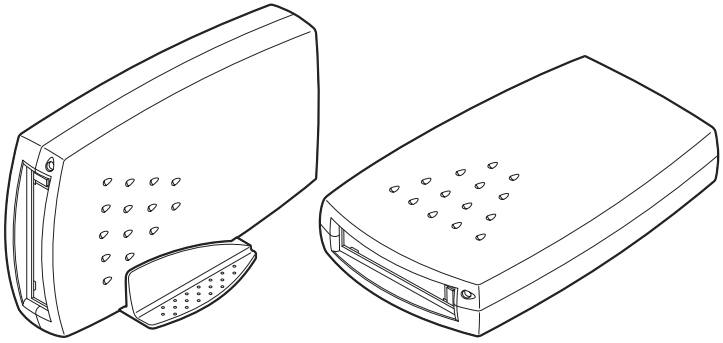

4 Connect the power adapter to the drive

Make sure the drive is turned off. Attach the small, round power connector to the tape drive, see figure 2. Plug one end of the power cord into the transformer and then plug the other end into a wall socket or power strip.

Figure 2 Connecting a Power Adapter

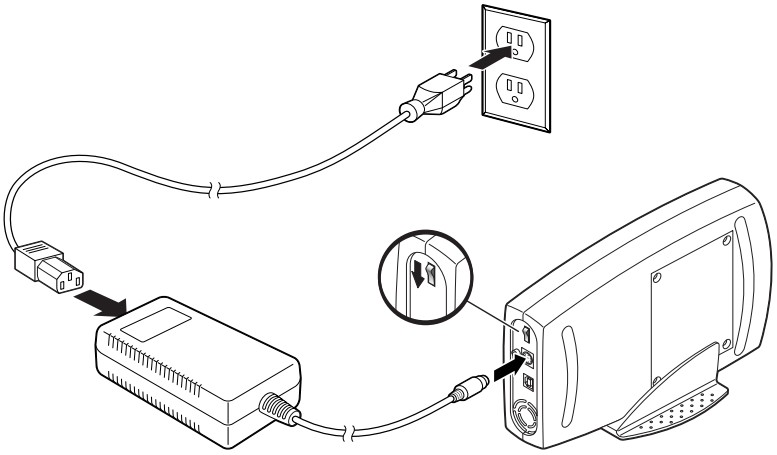

5 Turn on the drive

Move the power switch on the back of the drive to the **ON** (up) position, see figure 3. Your computer should already be powered on.

Figure 3 Turning on the Drive

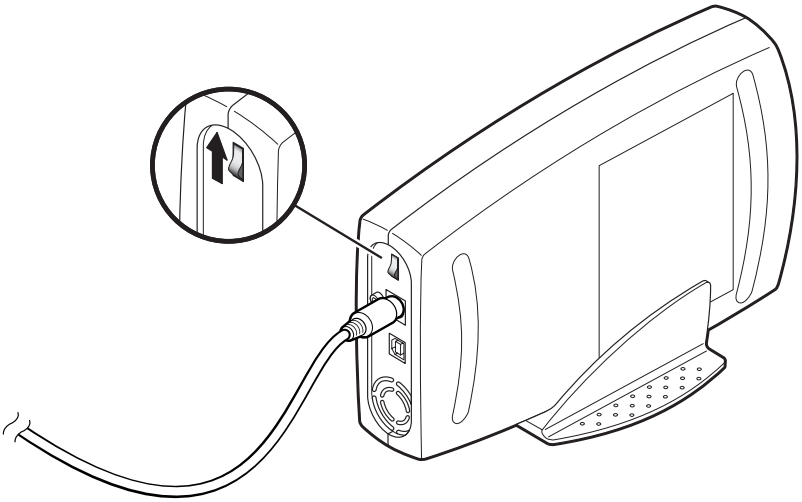

6 Connect the USB cable

a Attach one end of the USB cable to your tape drive, see figure 4.

b Attach the other end to your computer's USB port.

Figure 4 shows a USB port on the back of a typical computer. Your system may look different.

Figure 4 Connecting a USB Cable

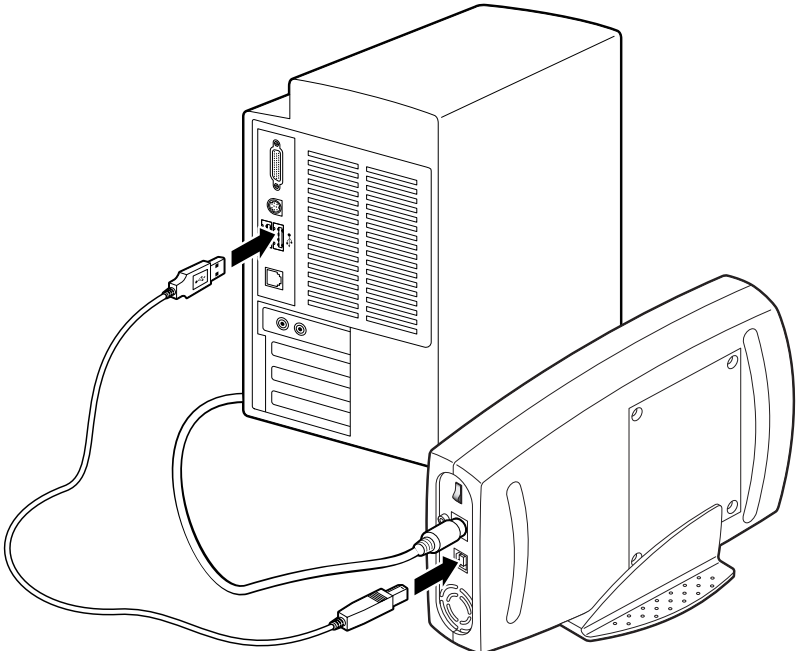

7 Install the appropriate driver

Driver for Windows XP/Windows 2003

If you are running Windows XP or Windows 2003, after Windows finds the plug and play device, the Found New Hardware wizard will open.

a Select **Install from a list or specific location,** click **Next**.

b Select **Don't search, I will choose driver to install,** click **Next**.

c On the hardware type screen, scroll through the list, select **Tape Drives,** click **Next**.

d Select the device driver you want to install:

- Manufacturer: (**standard tape drives**)
- Model: **IDE (QIC-157) tape drives**

e Click **Yes** through the update driver warning.

f Select **Finish**.

g In the Windows Device Manager (from the Control Panel):

1 Double-click on **System**

2 Select the **Hardware** tab

3 Click on the **Device Manager** button) to make sure that the tape drive is listed.

Driver for Windows 2000

a If you are running Windows 2000, after Windows finds the plug and play device, the **Found New Hardware** wizard will open. Click **Next**.

b Insert the Certance Resource CD, if not already inserted, into your CD-ROM drive. If it autoruns, click the **Exit** button.

c In "Install Hardware Device Drivers," select **Search for a suitable driver for my device (recommended)**, then click **Next**.

d In **Locate Device Drivers** check the **CD-ROM drives** box and uncheck the other boxes. Click **Next**.

e In **Driver Files Search Results** you should see: **Windows found a driver for this device. ...\tw157.inf.** Click **Next**.

f In **Completing the Found New Hardware Wizard** you should see **The wizard has finished installing the software for: USB tape drive (QIC-157).** Click **Finish**.

g Go into the Windows Device Manager (from the Control Panel, double-click on **System**, then select the **Hardware** tab, then click on the **Device Manager** button) to make sure that the tape drive is listed.

8 Remove the Certance Resource CD from your CD-ROM drive and insert the TapeWare CD

Follow the instructions to install TapeWare.

Congratulations! Your new Travan Portaboe USB tape drive is now ready to run a backup, see chapter 2, Opertation and Maintenance. For instructions on using your backup software, see the online manual that came with the software.

Note: If you have difficulties with the installation, see chapter 3, Troubleshooting.

Chapter 2

Opertation and Maintenance

This chapter describes the operation and maintenance of your Quantum Travan Portable USB Tape Drive.

Caution: Always close the backup software before unplugging the tape drive's power cord or USB connector. If you do not close the program you may lose data.

Loading and Unloading Cartridges

On the front of your drive is an opening with a hinged door for inserting Travan cartridges. Next to the door is the drive-activity light (which doubles as an eject button on the Travan 40GB drive).

- Travan cartridges must be inserted in the drive with the metal baseplate facing down (if the drive is horizontal) or left (if the drive is vertical, as shown in figure 5).
- The loading and unloading procedures are different for the 20GB and 40GB drives.

Table 1 Loading a Cartridge

Travan 20GB Drives	Push the cartridge firmly into the drive until it stops (about 1/3 of the cartridge remains visible outside the drive).
Travan 40GB Drives	Push the cartridge *gently* into the drive until it is gripped by the drive mechanism and pulled into the drive.

Figure 5 Loading a Cartridge

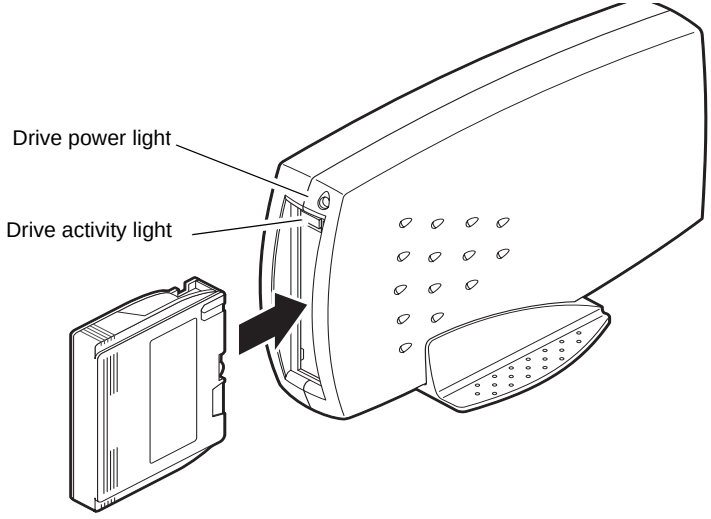

Caution: **Do not remove a tape cartridge while the drive-activity light is on.** If the drive-activity light has gone out but you believe your backup or restore operation did not complete, repeat the operation before removing the cartridge.

Table 2 Unloading a cartridge

Travan 20GB Drives	ait until the drive-activity light is OFF. Grasp the exposed sides of the cartridge and pull the cartridge straight out.
Travan 40GB Drives	Make sure the drive-activity light is OFF. Push the Drive-Activity Light/Eject button. When the cartridge has been ejected by the drive, grasp the exposed sides of the cartridge and carefully pull the cartridge straight out.

Handling Travan Cartridges

Although Travan tape cartridges are ruggedly built, they must be handled with care. Observe the following precautions:

- Store cartridges in their protective cases when you are not using them.
- Keep cartridges away from dust, dirt and moisture.
- Keep cartridges away from direct sunlight and heat sources, such as radiators or warm air ducts.
- Do not expose cartridges to temperature extremes or rapid changes in temperature.
- Keep cartridges away from sources of electromagnetic fields, such as telephones, computer monitors, printers, dictation equipment, mechanical or printing calculators, motors or bulk erasers.
- Do not open the tape access door of a cartridge or touch the tape itself. One fingerprint can prevent the drive from reading information on the tape.

Note: For additional handling recommendations, see the literature included with your tape cartridge.

Retensioning Tapes

Travan tapes must be retensioned frequently to ensure data integrity and optimize drive performance. Retensioning involves running the entire tape through the drive, from beginning to end.

For optimum performance, cartridges used for daily backups should be retensioned prior to each use. **Your backup software automatically retensions the tape before each backup and restore operation.** However, if you ever have a problem reading a tape, manual retensioning (using your backup software) may solve the problem.

We recommend retensioning whenever a cartridge:

- Is being used for the first time
- Has not been used for over a month
- Has been dropped
- Has been shipped
- Has been exposed to a significant change in temperature

Write-Protecting Cartridges

Travan cartridges feature a write-protect or lock switch near the upper left corner of the cartridge. When the write-protect switch is in the unlocked position, see figure 6, the cartridge is ready for normal writing and reading. When the write-protect switch is in the locked position, the drive can read data from the cartridge, but cannot write to the cartridge. Cartridges are usually shipped from

Figure 6 Write-Protecting a Cartridge

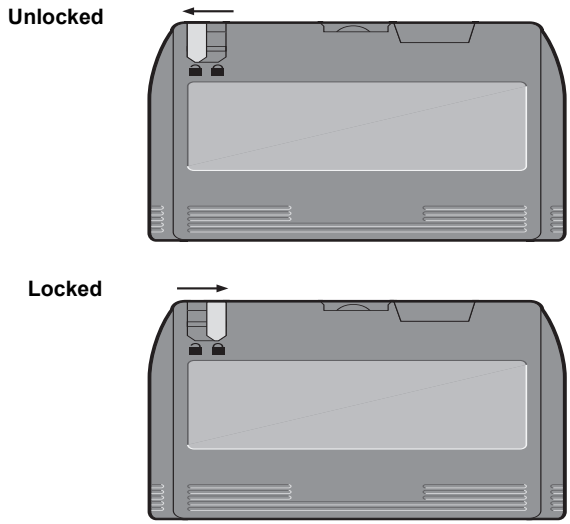

Recommended Tape Cartridges

> **Note:** For best results, use Quantum-branded data and cleaning cartridges, which are tested and certified to meet strict performance and quality specifications defined by Quantum engineers.

The following table lists the types of tape cartridges that can be used with the Quantum Travan 20GB and 40GB drives.

Table 3 Compatible Tape Cartridges

Tape Drive	Compatible Formats	Tape Capacity
Travan 20GB drive Read/write: Read only:	 Travan 20 (TR-5) QIC-3220 (all other tape formats are incompatible)	 20 Gbytes 20 Gbytes
Travan 40GB drive Read/write: Read only:	 Travan 40 Travan 20 (TR-5) (all other tape formats are incompatible)	 40 Gbytes 20 Gbytes

Note: Tape capacities listed in this table are based on 2:1 data compression. Capacities, backup speeds and transfer rates will vary with file type and system configuration.

Cleaning the Tape Drive Mechanism

We recommend periodic cleaning of the tape drive mechanism using an approved dry-process Travan cleaning cartridge. Generally, the more severe the operating conditions (the greater the amount of dust or moisture in the air), the more often the drive should be cleaned. Be sure to clean the drive immediately if you observe an increase in the number of errors while running your backup software, or if a cleaning message is displayed.

With the newer generation of Travan tape drive heads used in these drives, only the dry-process cleaning-cartridge method is recommended. This method does not involve any flammable materials and provides a clean recording surface by wiping away debris as the cleaning material passes across the recording head.

Chapter 3

Troubleshooting

If you have problems installing or operating your drive, please read through this section and try the proposed solutions.

Basic Troubleshooting

If your computer does not recognize your tape drive, first make sure of the following:

- The power and USB cables are attached firmly.
- The computer and tape drive are turned on **before** you attach the drive to your computer.
- You have installed the backup software properly.

If your computer still does not see the tape drive, see Advanced Troubleshooting.

Note:	If you have successfully installed the drive and software, but later encounter problems, see Tape Operations Troubleshooting.

Advanced Troubleshooting

- Make sure you are using a supported version of Windows.

  Windows 95 and Windows NT do not support USB devices.
- Make sure that the tape drive is connected to the AC power source and switched on before you connect it to the computer.
- If your computer has more than one USB connector, try switching the tape drive to the unused connector.
- For the Travan 40GB, a high speed USB 2.0 interface is strongly recommended.

  To enable this interface, you may need to install a Windows system upgrade from the Microsoft web site (www.microsoft.com).
- For Windows 98 or Windows Me, check to make sure that you are using the USB driver supplied on the Quantum Resource CD.
- Open the Windows **Control Panel** (Start > Settings > Control Panel) and double-click the **Add New Hardware** icon.

  Choose the option that allows the system to search for your USB tape drive automatically. This may allow the system to find your new drive.
- Check to make sure that your USB controller is listed in the Windows Device Manager.

  To open the Device Manager:

  a Click **My Computer** with the right mouse button and select **Properties** from the menu.

  b Click the **Device Manager** tab.

  Your USB controller should be listed under **Universal Serial Bus Controllers**. The Windows 98 and Windows 2000/Windows XP Device Managers are shown in figure 7 and 8 respectively. If your device is not listed, recheck the cables and try the other troubleshooting suggestions listed here.

Figure 7 Locating Your USB Controller (Windows 98)

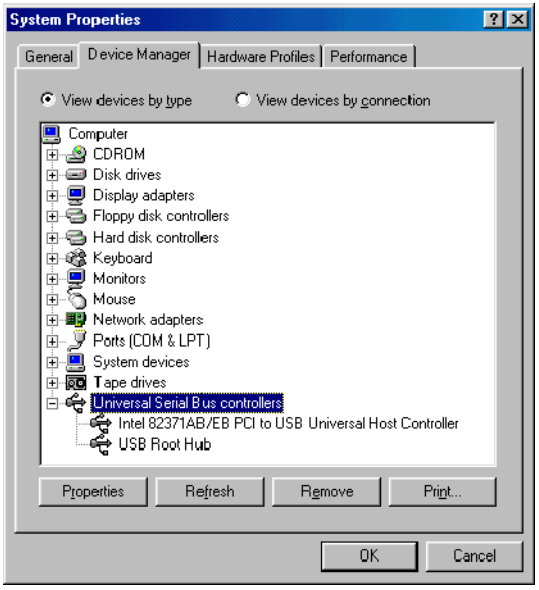

Figure 8 Locating Your USB Controller (Windows 2000 or Windows XP)

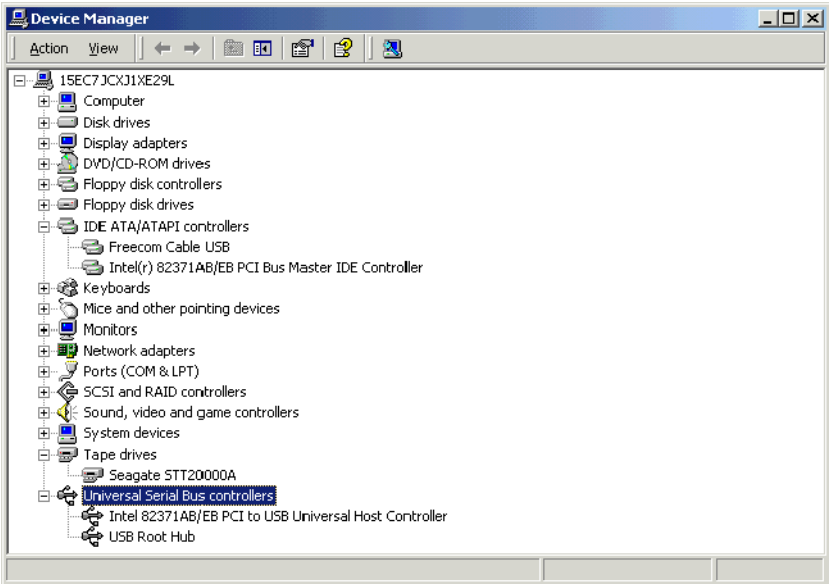

- If you are using the Travan 40GB tape drive, make sure that the Windows Device Manager shows a USB 2.0 Root Hub.

- If you have multiple USB devices, you may be able to resolve potential USB driver conflicts by disconnecting all USB devices, then restarting your computer in Safe Mode (press F8 during reboot). Right-click your tape drive in **Device Manager**, then select **Remove**. Restart your computer. After the computer has booted up, attach the tape drive to the USB port so that the system can rediscover it.

Tape Operations Troubleshooting

If the tape drive "shoeshines" or "shuffles" (stopping and starting frequently) during backups, try the following troubleshooting procedures:

- Make sure that no other programs (including anti-virus programs) are running while you perform the backup.
- Try turning off or disconnecting any devices that may be sharing the USB port with the tape drive.
- If you are using a Travan 40GB drive, a Hi-Speed USB 2.0 port is strongly recommended. An add-in Hi-Speed USB 2.0 adapter card is available at most computer dealers.

If, after a period of successful operation, the tape drive appears to fail during a backup or restore:

- Check to make sure all the power and USB cables are securely connected.
- Retension the tape, as described in the manual for your backup software.
- Turn off the computer. Wait for the computer to power down and then restart the system. Rerun the backup software, making sure that no other programs (such as virus scanners) are running.
- Remove the cartridge and then reinsert it into the drive.
- Try a different cartridge—preferably one that has never been used before.

- Make sure you are using the correct type of tape cartridge, see table 3 on page 12.
  - You cannot use TR-4 tapes with the Travan 40GB drive.
  - You cannot use TR-1, TR-2, TR-3 or QIC-80 tapes with either the Travan 20GB or 40GB drives.
- Clean the tape mechanism, see Cleaning the Tape Drive Mechanism on page 12.